Hitachi Kokusai Electric

HITACHI

IEEE1394.b Interface Progressive Scan Color Cameras

KP-FD140F KP-FD32F

KP-FD140F-S3 / KP-FD32F-S3

IEEE1394.b Interface

- The IEEE1394.b interface allows direct high speed data transfer between the camera and the PC using a small 8 conductor cable.
- The 800 Mbps transfer speed of the IEEE-1394.b interface permits higher frame rates for high resolution cameras.
- Multiple cameras can share the IEEE-1394.b bus using a simple daisy chain connection.

Series

- **-S1:** White exterior for medical use model
- **-S2:** With 12 pin connector model
- **-S3:** With 12 pin connector & white exterior for medical use model

The lineup

- **KP-FD140F** 1.45 million pixels for high resolution (SXGA) at 15 frames per second. Designed for High Resolution color inspection.
- **KP-FD32F** 330,000 pixels for standard resolution (VGA) at a high frame rate of 60 frames per second. Designed for high speed inspection.

Versatile features support many applications

- Electronic shutter
- Hardwired Trigger
- White balance
- Daisy chain
- External sync
- Partial scan
- Independent 6 color masking
- Remote control

Connection example

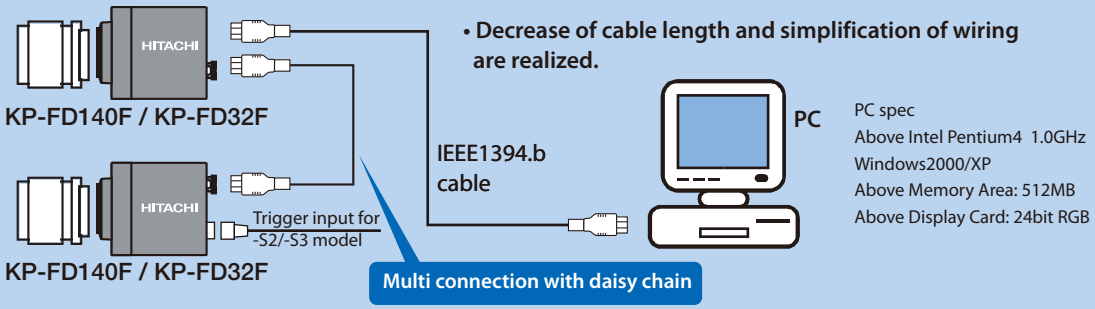

- Decrease of cable length and simplification of wiring are realized.

PC spec
Above Intel Pentium4 1.0GHz
Windows2000/XP
Above Memory Area: 512MB
Above Display Card: 24bit RGB

Main Specifications

	KP-FD140F	KP-FD32F
Imaging device	1/2-inch interline type all pixel read-out system CCD	
Total pixels	1434(H) x 1050(V)	692(H) x 504(V)
Effective pixels	1392(H) x 1024(V)	656(H) x 492(V)
Pixel pitch	4.65 µm(H) x 4.65 µm(V) [square lattice]	9.9 µm(H) x 9.9 µm(V) [square lattice]
Scanning system	Progressive scan	
Synchronization	Internal/external (automatic switching)	
Picture signal output		
Interface	IEEE1394.b (FireWire800)	
Protocol	IEEE1394-based Digital Camera Specification Version 1.31 Conformity	
Transmission speed	800 / 400 / 200 Mbps	
Output data form	RGB24/ YUV(4:2:2) / Raw8 / Raw16	
Output picture size	1392(H) x 1024(V) 1280(H) x 960(V) 1024(H) x 768(V) 800(H) x 600(V) 640(H) x 480(V)	656(H) x 492(V) 640(H) x 480(V)
Frame rate	15 frames/second (RGB24, 1392(H) x 1024(V))	60 frames/second (RGB24, 656(H) x 492(V))
The minimum photographic subject illumination	25 lx (F1.4, maximum gain)	20 lx (F1.4, maximum gain)
Gain	Automatic / manual (0 dB to 18dB)	
Electronic shutter speed	Automatic(AES) / manual operation(VARIABLE) 1/100000 second to 10 second	
External trigger		
Mode	Fixed shutter (Mode 0), one trigger (Mode 1)	
Input	Software Trigger: 1394 Cable Hardware Trigger: 1394 Cable (Hitachi System) standard model, or 12 pin connector on S2 or S3 model.	
Current consumption	Approx. 3.8 W (DC+12 V)	Approx. 3.6 W (DC+12 V)
Automatic picture level control (ALC)	Picture level adjustment is possible	
White balance control	ATW / MANUAL / One-push	
Gamma	OFF / LUT	
Color masking	OFF / ON (6 color independence masking)	
Color saturation	Adjustment is possible.	
Sharpness	Adjustment is possible.	
Brightness	Adjustment is possible.	
Daisy chain	Connection is possible.	
Lens mount	C mount (With a flange back adjustment mechanism)	
Power supply	DC +8 to +30 V via 1394 cable or external input via 12 pin connector for S2 and S3 model.	
Ambient		
Operating	0 to + 40 ºC (+32 to ; 104 ºF), 30 to 80%RH * If operated continuously, be sure to use at less than +40 ºC(104 ºF) for long term stable performance.	
Storage	–10 to +50 ºC (+14 to +122 ºF), 20t o 90% RH	
Vibration endurance	less than 68.65 m/s² (It is the XYZ direction 30 minutes each about 10 to200Hz) *Please do not add a strong vibration over a long time	
Shock endurance	less than 490.3 m/s² (XYZ direction)	
External dimensions	44(W) x 44(H) x 48(D) mm (without lens)	
Mass	Approx. 130 g (without lens)	
Standard Accessory	Camera Body, CD-ROM (operation manual, driver software), HR10A-10P-12S (01) with S2 and S3 models	

Dimensions

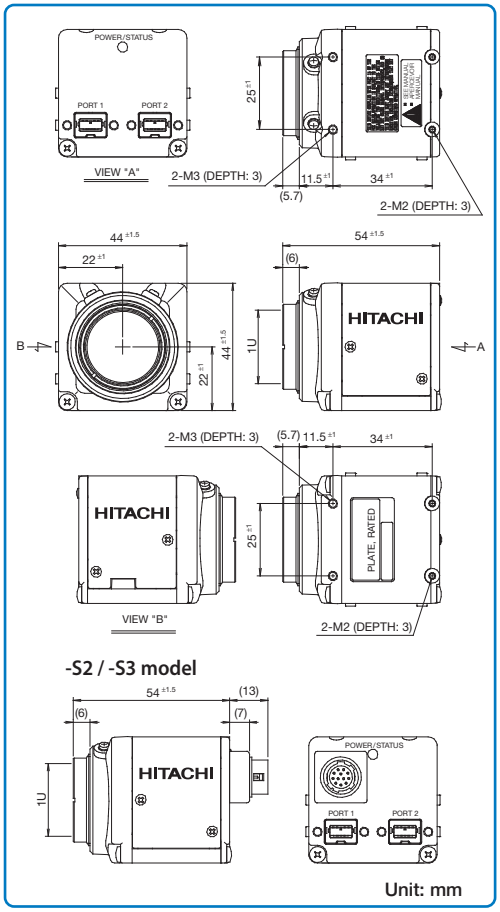

Rear View

Standard model
(-S1 model: white exterior)

-S2 model
(-S3 model: white exterior)

Optional Accessory

IEEE19394 Cable	
Tripod Adaptor	TA-FD140

⚠ **CAUTION:** To ensure safe operation, please read the instruction manual before using this product.

These Specifications are subject to change without notice.

Hitachi Kokusai Electric Inc.

Head Office : 14-1,Sotokanda 4-choume, Chiyoda-ku, Tokyo 101-8980, Japan
Phone : +81(0) 3-6734-9432, Fax : +81(0) 3-5209-5942
URL : http://www.h-kokusai.com

Hitachi Kokusai Electric (Shanghai) Co., Ltd. Beijing Branch
Room 1413, Beijing Fortune Building, 5 Dong San Huan Bei-Lu, Chao Yang District, Beijing
Phone : +86(0) 10-6590-8755/8756, Fax : +86(0) 10-6590-8757

Hitachi Kokusai Electric America, Ltd. URL : http://hitachikokusai.us
Headquarters and Northeast Office : 150 Crossways Park Drive, Woodbury, New York 11797, U. S. A.
Phone : (+1) 516-921-7200, Fax : (+1) 516-496-3718
West Office : 371 Van Ness Way, Suite 120 Torrance, CA. 90501, U. S. A.
Phone : (+1) 310-328-6116, Fax : (+1) 310-328-6252
Midwest Sales : Phone : (+1) 330-334-4115, Fax : (+1) 516-496-3718
Service (+1) 989-345-5379
South Sales : Service (+1) 256-774-3777
Parts Center : Phone : (+1) 516-682-4435, Fax : (+1) 516-921-0993
Latin Sales : Phone : (+1) 516-682-4420, Fax : (+1) 516-496-3718

Hitachi Kokusai Electric Canada, Ltd. URL : www.hitachikokusai.ca
Head Office : 1 Select Avenue Unit#11 Scarborough, Ontario M1V 5J3, Canada
Phone : (+1) 416-299-5900, Fax : (+1) 416-299-0450
Eastern Office : 5795 Chemin St. Francois St. Laurent, Quebec H4S 1B6, Canada
Phone : (+1) 514-332-6687, Fax : (+1) 514-335-1664

Hitachi Kokusai Electric Europe GmbH
Head Office : Weiskircher Straße 88, Jügesheim D-63110 Rodgau, Germany
Phone : +49(0) 6106-69920, Fax : +49(0) 6106-16906
URL : www.hitachi-ke-eu.com
General email address : info@hitachi-ke-eu.com

Hitachi Kokusai Electric U.K. Ltd.
Head Office : Windsor House, Britannia Road, Waltham Cross, Hertfordshire EN8 7NX, United Kingdom
Phone : +44(0) 845-121-2177, Fax : +44(0) 845-121-2180
General email address : uksales@hitachi-ke-eu.com

CERTIFICATE No.
JMI-0062
ISO 9001/BS 5750Pt1
EN 29001/JIS Z9901

DV-E528Q Printed in Japan (1) '07-02